STEERING, GEAR BOX - Z26NEY99A4/B4/A6/B6 (C760074)

2026 RZR - RZR XP S 1000 ULTIMATE (R01) - Z26NEY99A4/B4/A6/B6

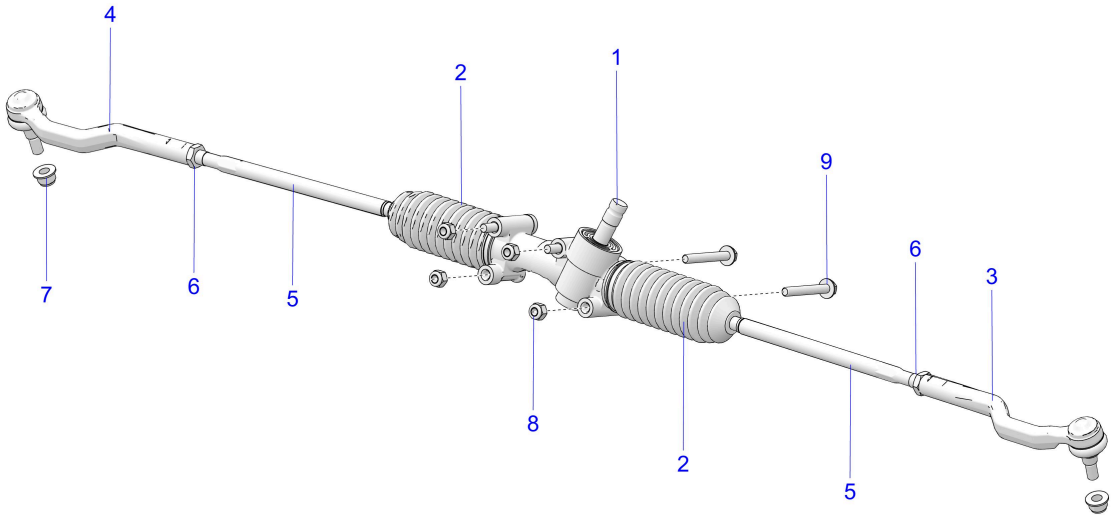

© 2025 Polaris Industries Inc. C760074

Reference #	*Part#*	*Description*	*Quantity*
1	1830319	ASM-GEAR BOX,STEERING,CAST [INLCUDES 2-6]	1
2	5416256	BOOT-DRIVER SIDE,K [INCLUDES 1 BELLOW & CLAMPS]	1
3	7061257	ROD-END,TAPERED,PROFILED,LH	1
4	7061258	ROD-END,TAPERED,PROFILED,RH	1
5	7061256	INNER TIE ROD	2
6	2208131	LOCK NUT KIT	1
7	7547334	NUT-M12X1.5, FLG, NYLOC-OLIVE D	2
8	7548155	NUT-HEX-M10X1.25X 8 ZTB NYL	4
9	7519286	SCR-HXFL-M10X1.25X75 10.9 ZOD	2

Copyright 1996-2026 Polaris Industries U.S.A All rights reserved.